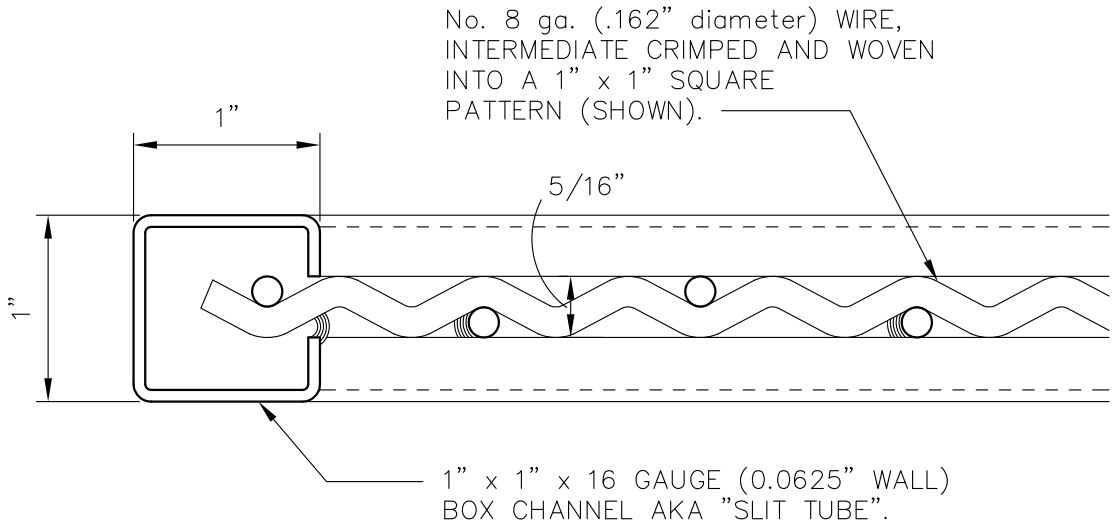

RP-12

(SEE TABLE FOR OTHER APPROPRIATE
MESH CHOICES)

THE G-S COMPANY

JULY 6, 2010